A

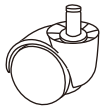

5pcs

B

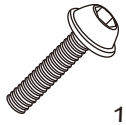

10pcs
M6x25mm

C

4pcs
M6x18mm

D

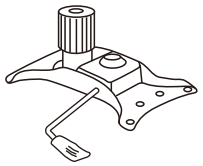

E

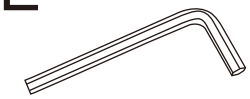

1

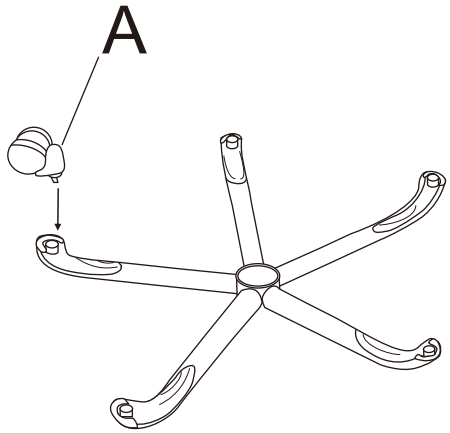

2

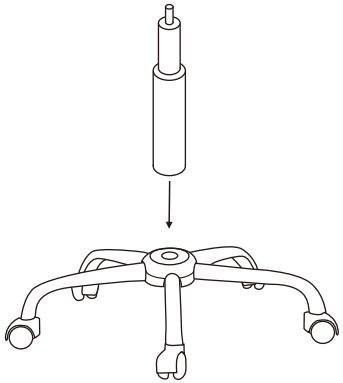

3

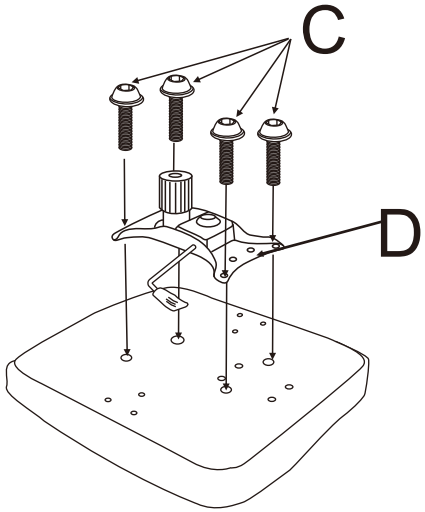

4

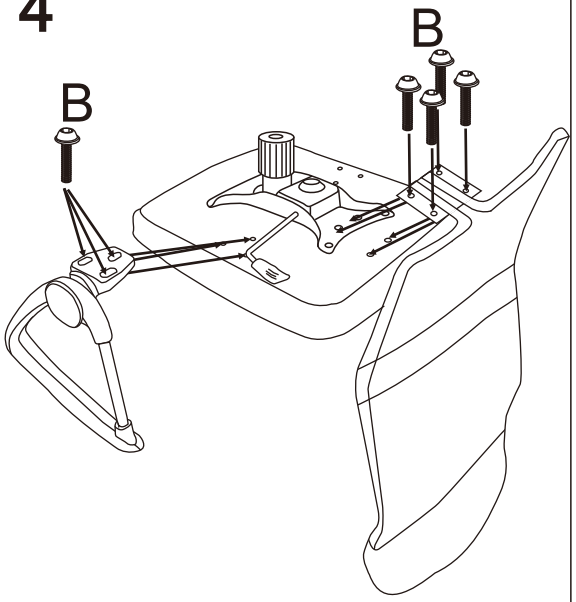

5

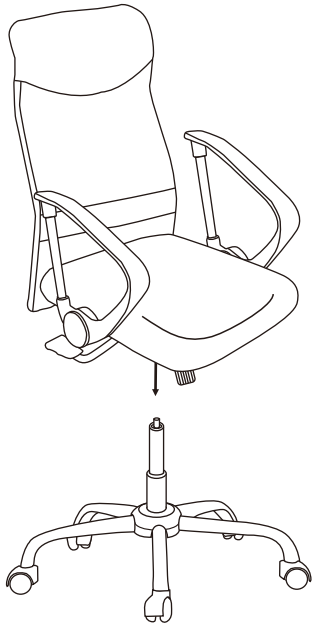

6